Great Lakes Case & Cabinet Co., Inc.
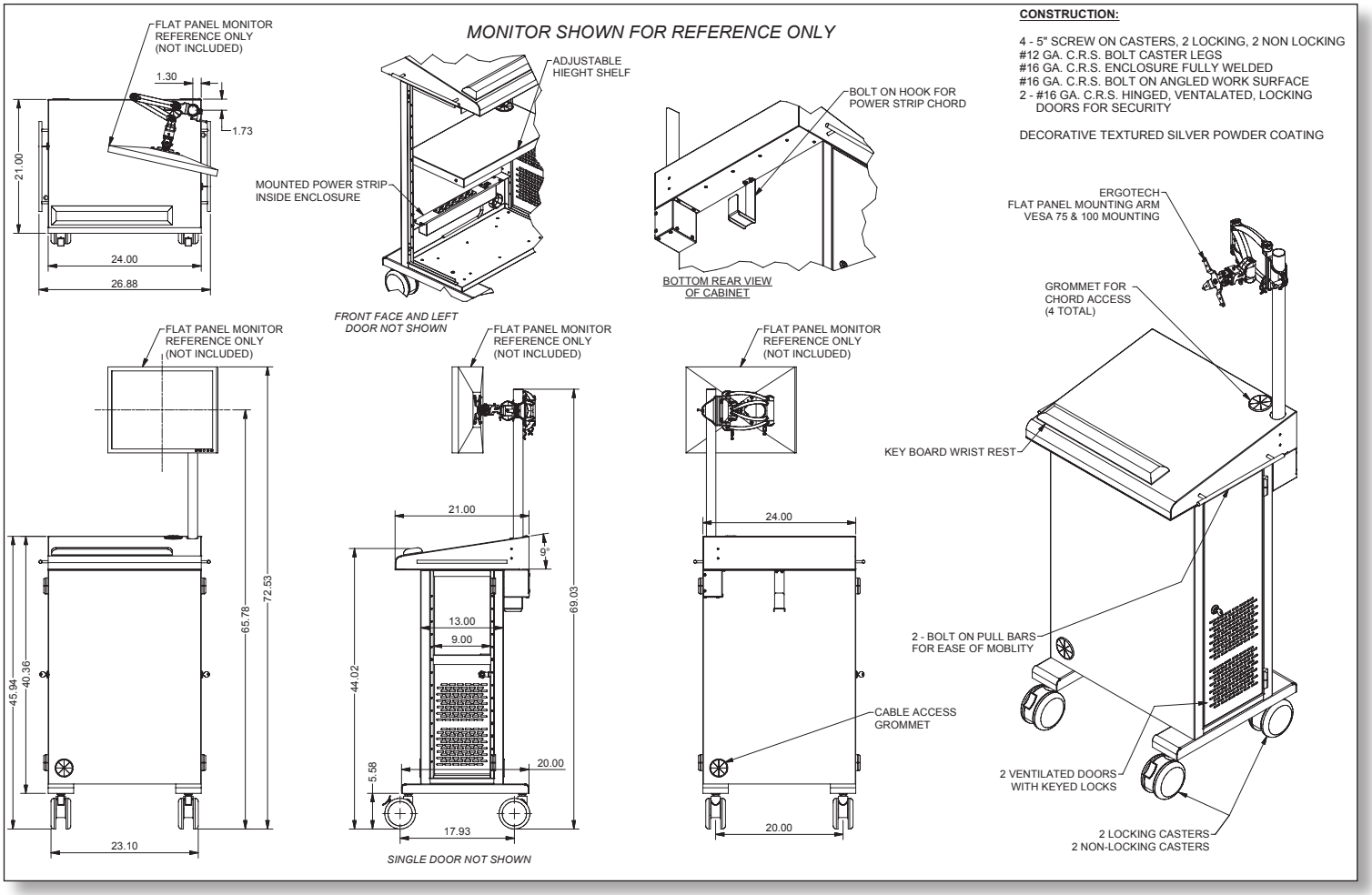
BS2-MWS (MOBILE WORK STATION)